Squarell technology

technical vehicle data

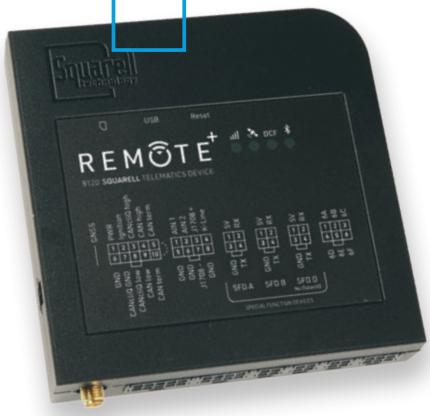

REMOTE+

In Vehicle Monitoring System

REMOTE+
8120 SQUARELL TELEMATICS DEVICE
GNSS
PWR
Ignition
CANcliQ high
CAN high
CAN term
GND
CANcliQ GND
CANcliQ low
CAN low
CAN term
AIN 1
AIN 2
J1708 +
K-Line
GND
GND
J1708 -
GND
5V
RX
GND
TX
SFD A
SFD B
SFD D
No Detection
SPECIAL FUNCTION DEVICES
6A
6B
6C
6D
6E
6F
USB
Reset
DCF

What is the REMOTE+?

A state of the art One Box Solution **designed for automotive use** according to ISO 7637-2.
The REMOTE+ is a small box equipped with a Modem, GNSS/ GPS, G-sensor and RTC. It can handle all vehicle networks and has three Special Function Device ports (SFD) available.

Reliable Vehicle Data

For more than 20 years Squarell has been the Vehicle Data Specialist. Our Engineers unravel CAN bus **protocols of all vehicle brands**.
We currently have more than 450 parameters available, found on the networks in vehicles or developed for customer application.
The REMOTE+ generates data that can be used for vehicle **Performance, Maintenance, Safety, Liability, Environment** and **Diagnostics**.

Application Area

Our devices are used in different market segments such as: Trucks and Trailers, Vans, First Response Vehicles, Military Vehicles, Money Transport, Garbage Trucks and many other areas of application.

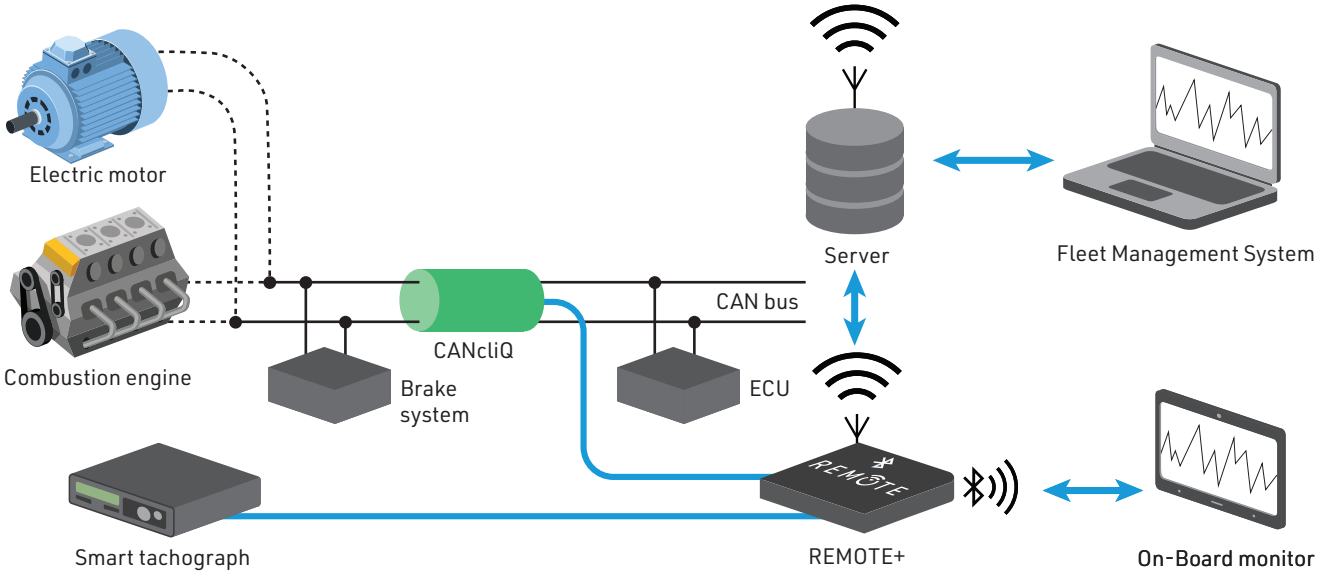

Possible Vehicle Network Connections

- 2 Hardwired/CANcliQ's and 2 DatacliQ **CAN bus** connections with automatic baud rate detection, up to 1000 Kbaud (including 667 Kbaud), Internal 120R terminator connection for CAN port 2.
- 1 Hardwired and 1 DatacliQ **J1708** Vehicle Network connection.
- 1 Hardwired **K-line** Vehicle network connection with Slow and Fast initialisation.

We read directly from the vehicle networks and OBD, a brand specific FMS device is not required.

CAN networks , Power and Ignition are accessible via one 10-pole Molex Micro-fit connector, the K-line, J1708 and the analogue inputs are available via one 8-pole Molex Micro-Fit connector on the front of the device.

Vehicle Protocols

For CAN bus we support J1939, ISO11992, NMEA 2000 and **all manufacturer** specific communication protocols.
For J1708 the J1587 and J1922 protocols are available.
For K-line the ISO 9141 and ISO 14230 variants are available.
Connect the ISO11992 Trailer CAN bus via a DataCliQ on SFD port A or B.

Micro B USB Port

The Micro-B USB port can be used to upload sotfware into the device. When this USB port is connected to a **Fleet management Tablet**, the REMOTE+ represents itself as a Serial port under DCF control.

Analogue Input Ports

2 analogue inputs can measure analogue signals up to 30 VDC with a 1 mV resolution or can be used to read **2 digital input signals**. The sample rate is 10 ms.

Bluetooth

The REMOTE+ has integrated Bluetooth

Wireless Network Connections

The Modem of the REMOTE+ has a 2G band for GSM 850 and 900 MHz and DCS 1800, PCS 1900 MHz and also a 4G LTE-M band with 2G fall-back.The REMOTE+ switches **automatically** to the alternative band when the present network fails. The modem antenna is built-in.

Wireless Network Protocols

The user can select 3 communication protocols for the REMOTE+: **TCP, MQTT** and **HTTPS.**
TCP and MQTT are more commonly used but we have implemented the HTTPS protocol for high security applications such as military vehicles and money transport vehicles.

Data transmission

The user can select the envelope mode for data transport, the data transmission is than **more efficient**. For the data transmission a 4 MB data buffer is available. Due to the combination of both features a lot of data can be stored for a long period of time and accelerated the Tacho Download sigificantly.

SIM card

A Nano SIM card can inserted on the top of the device.

Global Navigation Satellite System (GNSS)

The GNSS receiver in the REMOTE+ is designed to receive signals from different satellite systems like GPS, GLONASS, Beidou and Galileo. For a good location reception, the antenna must be placed outside the vehicle.
The location data rate in the REMOTE+ depends on the speed and movement of the vehicle. Our algorithm ensures **high accuracy** on the map at a **low data transmission rate!**

Second Micro Processor Unit

In addition to the standard DCF processor, the REMOTE+ has a second MPU. The versatile configuration, the different communication protocols, the data transmission envelopes and the wake-up, sleep and deep sleep states are handled by this MPU. A smart helper.

Sleep and Wake-up

The REMOTE+ is able to sleep and still monitor the CAN bus for activity, it can even be in deep sleep and still be awakened by motion or time to perform a task.

Real Time Clock

The Real Time Clock has its own battery that keeps the RTC active during power off or sleep mode. The REMOTE+ can be **woken** at a time or a **time interval**. The RTC will synchronise on Google NTP.

Accelerometer

The REMOTE+ has a 3-axis accelerometer that can detect movements of the device (in a vehicle or trailer) for theft detection.
Even in deep sleep mode the REMOTE+ can wake-up on movements and send a warning to the home base.

Special Function Devices (SFD)

On the 3 SFD ports several Special Function Devices can be connected like the DatacliQ, the Driver Awareness Panel (DAP), the Power Output Module (POM). The SFD ports A, B and C are accessible via 3 Molex Micro-Fit 4-pole connectors on the front of the device.

Power Supply acc. to ISO 6737-2

The Power Supply of the REMOTE+ is designed according to the automotive power supply standard ISO 6737-2.
The supply voltage range is 10 – 30 Vdc. The average power consumption is at 24Vdc **50mA**, during deep sleep mode the power consumption is 24Vdc 5mA.

Certificates

CE, **E4**, UKCA, RoHS. According to the regulations, the REMOTE+ is tested once a year by a **certified body** for the E4 certificate and is therefore allowed to communicate on vehicle networks.

Physical characteristics

The device is 100 x 100 x 20 mm and weighs 130 grams.
Due to the high requirements, -40...85 deg C, the components are **long life** and **automotive grade**, the housing is UL94 V-0 flame retarded and has an IP40 protection rate.

Country of origin

The device is entirely designed and produced in the Netherlands.

Support

A group of highly educated automotive engineers support the REMOTE+ with an extended manual, diagnostic and upload software iControl and FOTA. We provide a standard 2-year warranty on the REMOTE+.
The manual and configuration is available by reading the **QR code** on the back side of the device.

Firmware Over The Air (FOTA)

Squarell's FOTA system is a HTTPS API through which the REMOTE+ can download necessary files for updates. A FOTA session is always initiated by the REMOTE+ and the FOTA server responds. The connection is encrypted.

Battery Pack

One option is an external Battery Pack.
If the REMOTE+ also has a monitoring task and needs to be woken up by movement or activity on the CAN bus, an external battery pack is desirable. 1, 2 or 3 x 2600 mAh cells can be connected. The REMOTE+ can generate 20 days heartbeats on 1 cell. This battery package is charged by the REMOTE+ itself.

REMOTE+

With the REMOTE+ Squarell wants to offer the most complete In Vehicle Monitoring System possible and simplify installation as much as possible.

This comprehensive device is equipped with a modem, GNSS/GPS, bluetooth, G-force and can be non-intrusively connected to various vehicle networks.

Due to the differences between the major brands, we supply DCF software according to the latest rFMS standard with totals for the following brands:

- DAF
- Iveco
- MAN
- Mercedes
- Renault
- Scania
- Volvo

The software for the following subscriptions is installed and can be turned on remotely:

- Remote Tacho Download (RTD), get your DDD files from our server
- Remaining Driving Time (RDT)
- Live Tacho Data and K-line port on (LTD)
- Advanced Generated Tell-tales Solution (TTS)
- SW Driver Awareness Panel, needs BT2.1 (DAP)
- Squarell Event Data Recorder (EDR)
- Dual Inputs and AIN ports on (AIN)
- ISO 11992 Data (ISO)
- CleANopen (CLO)
- rFMS (remote FMS)

The software for the following SFD devices is already installed:

- Hardware Driver Awareness Panel (DAP) for savings up to 14%
- Power Output Module (POM) for direct vision cameras
- DatacliQ for non-intrusive connection

The 3 types of cables are:

- Power with CANcliQ
- Power with CANcliQ and K-line (Iveco, Mercedes, Scania)
- Power with CANcliQ, K-line and DatacliQ (Volvo, Renault, DAF, MAN)

Think of Squarell when vehicle data becomes important!

REMOTE+ properties

DEVICE CONFIGURATION FILE (DCF)	
Configuration system	For data processing and parameter enhancement
DCF memory	320 kB

NETWORK CONNECTIVITY	
Network protocols	MQTT, TCP, HTTPS
2G bands	GSM 850 MHz, E-GSM 900 MHz, DCS 1800 MHz, PCS 1900 MHz
4G bands	LTE-M (2G fall back)
SIM	Nano-SIM
Antenna	Internal
User acknowledge	Configurable

GLOBAL NAVIGATION SATELLITE SYSTEM (GNSS)	
GNSS	GPS, GLONASS, Beidou, Galileo
Cold start sensitivity	-148 dBm
Accuracy (Open Sky)	< 2.5 m (CEP50)
Hot start	< 1 s
Cold start	< 35 s
Data rate	On changes steering angle & every 60 s and 500 m
Antenna	External active antenna
Antenna connection	SMA

CAN BUS	
Hardwired ports	2
Hardware protocol	CAN V 2.0a, CAN V 2.0b
Internal terminator	CAN port 2 only
Via additional CANcliQ or DatacliQ	4
Baud rate	Selectable: 10 - 1000 kBd
Automatic baud rate detection	Yes
Supported protocols	J1939, ISO11992, NMEA 2000, Proprietary
Default device address	240

J1708	
Hardwired port	1
Via DatacliQ	1
Baud rate	9600 Bd
Protocols	J1587, J1922, Proprietary

K-LINE	
Hardwired port	1
Via DatacliQ	1
Baud rate	1200 - 20000 Bd
Protocols DCF selectable	ISO 9141 (FAKRA)/ISO 9141-2 (OBDII/CARB)
	ISO 14230-2 (KWP 2000)
	ISO 14230S (Swedish)
Initialisation	Slow/Fast
Message timing	Configurable, with extended response time

SPECIAL FUNCTION DEVICE PORTS (SFD)	
Ports	3
SFD supply	4.75 - 5.25 V
SFD load	100 mA per SFD, 300 mA max to all SFDs
Default baud rate	9600 Bd
Port type	UART
Signal level	CMOS

OPTIONAL SFDs	
DatacliQ	CAN (port 1, 2, autobaud), ISO11992, J1708
Driver awareness	Driver Awareness Panel (DAP)
Power Output Module	6 high side drivers, 2 inputs

BLUETOOTH	
Bluetooth	2.1 and 4.0 LE

ANALOGUE INPUTS	
Hardwired	2
Input level	0 - 30 VDS, resolution 1 mV
Sample rate	10 ms

IGNITION LINE	
Active on	Yellow wire, or DCF, or extension board control

APPLICATIONS	
RTD	Remote Tachograph Download
RDT	Tachograph Remaining Driving Time
EDR	Squarell Event Data Recorder (SQ-EDR)
TTS	Squarell Advanced Tell-tales Solution
And many others	

REMOTE+ properties

LEDS	
Modem	Slow on no connection, faster on connection, continue on connection with server
GNSS	Flash on no GNSS, continue on GNSS signal
DCF	Red: wrong DCF. Green/short red: 1 CAN port not connected. Green: OK
Bluetooth	Blue led

POWER	
Input voltage range	10 - 30 VDC (power, ground)
Ignition line	Yes
Electrical isolation	No
Power consumption	1.2 W average normal operation (49 mA at 24 VDC, 98 mA at 12 VDC)
Sleep & deep sleep	150 mW in ultra sleep mode (6 mA at 24 VDC, 12 mA at 12 VDC)
Ultracapacitors 2.7 V 12 F	3 mAh - For shutdown and last resort call
Backup battery (optional)	1, 2, 3x 2600mAh (20 days heartbeat per cel)

REAL TIME CLOCK (RTC)	
RTC	included battery
Time synchronisation	Google NTP

CERTIFICATION	
Regulations	E4, CE, UKCA, RoHS
Data protection certifi-cates	Optional

PHYSICAL CHARACTERISTICS	
Dimensions	100 x 100 x 20 mm
Weight	130 g
Material	PC-ABS
Flammability rating	UL 94 V-0
Operating temperature range	-40 to 70 °C
Storage temperature range	-40 to 85 °C
Operating humidity range	10 - 90% (non-condensing)
Ingress Protection Rating	IP40
Designed and produced	In the Netherlands
Tie-wrap mounting slots	2

SUPPORT	
Product info	Scan QR code
Diagnostic and upload program	iControl
Micro-B USB port	Support software
Firmware Over The Air (FOTA)	From Squarell server
Reusable for other vehicles	Yes
Reset button	Yes
Warranty	24 months

BASIC SET	
Recommended	REMOTE+, CANcliQ, power cable and GNSS antenna

SOLUTIONS

Advanced Tell-tales
Environment
Event Data Recorder
Maintenance
Safety
Tachograph

PRODUCTS

BE
CANcliQ and DatacliQ
Driver Awareness Panel
Power Output Module
REMOTE+
SOLID+
Trailer Box

VEHICLES

Buses and Coaches
Electric Vehicles
First Response Vehicles

INFORMATION

CAN bus Networks
Wired Networks
Wireless Networks

Squarell Technology
Delfweg 48 | 2211 VN Noordwijkerhout | The Netherlands
+31 (0)252 42 03 11 | sales@squarell.com | squarell.com

MEMBER OF BHG
20250807_REMOTE+_PVV